Session Five:
Pump Condition Monitoring Through Vibration Analysis

Cornelius Scheffer

Associate Professor, Department of Mechanical and Mechatronic Engineering: Stellenbosch University

Abstract

It is well-known that vibration analysis is a powerful tool for the condition monitoring of machinery. This especially applies to rotating equipment such as pumps. Through the years a variety of vibration-based techniques have been developed and refined to cost-effectively monitor pump operation and the onset of failures. This paper is an overview of a variety of vibration-based condition monitoring techniques for pumps. In some instances these techniques are also applicable to improve the operation and efficiency of pumps. Specific aspects to consider when taking vibration measurements on pumps are for instance where to take readings, which type of probe to use, what frequency range should be used, what the settings on the analyzer should be, etc. Specific techniques and tools are also described that can be used to monitor certain components or failure modes. These are especially relevant from a predictive maintenance point of view in order to establish which components will require replacement, or to prevent catastrophic failures. Additionally, techniques to diagnose cavitation in pumps using vibration methods are also discussed. Based on the information presented, pump users can select the appropriate techniques and available tools to ensure cost-effective condition monitoring for their operations. This will lead to an overall improvement in plant efficiency and reliability.

Introduction

Maintenance of mechanical equipment is generally divided into four categories, describing different strategies towards maintenance. These categories are:

- Breakdown / run-to-failure maintenance
- Preventive / time-based maintenance
- Predictive / condition-based maintenance
- Pro-active / prevention maintenance

It is generally accepted that companies should implement an appropriate mix of these maintenance strategies to be cost-effective. There is a notion that the preventive methodologies and predictive maintenance methodologies involve high cost in terms of manpower and equipment to maintain machines. However, when the consequences of failures and running a plant at low efficiency is weighed against the cost of maintenance, it turns out that these maintenance practices save a lot of money.

When it comes to managing the consequences of breakdowns of mechanical equipment, we should go far beyond the traditional thinking that “failures are inevitable, and all failures and breakdowns are similar”. We should realize that failures lead to consequential damage to other parts of the machine. Failures incur consequences in terms of repair costs. Failures also affect the safety and environment in which the machine was operating at the time of failure. Condition monitoring of mechanical equipment is an accepted industrial practice to improve

plant safety, efficiency and reliability. Condition monitoring is generally viewed as a predictive maintenance technique. In this paper we will focus on the use of a common predictive maintenance technique, namely vibration analysis, for the condition monitoring of pumps.

Vibration Basics

- **Introduction**

Vibration is the displacement of a mass back and forth from its static position. It should always be understood that a force will cause a vibration, and that vibration can be described in terms of acceleration, velocity or displacement. The force that will cause the vibration, must overcome the structure's mass, stiffness and damping properties. These properties are inherent to the structure and will depend on the materials and design of the machine. There are three types of vibration:

- Free vibration (also called *resonance*)
- Forced vibration
- Self-generated vibration

Free vibrations occur when a structure is vibrating freely after the application of an input force. A common example of a free vibration is the ringing of bell. The initial strike of the gong provides the input force, but bell continues to vibrate and ring freely even after the input force has been removed.

Forced vibrations occur when a structure is being forced, by an input force, to move and vibrate in a certain way. There are numerous examples of forced vibrations. In rotating equipment, the most common form of a forced vibration is due to inherent unbalance in the rotating parts. The residual unbalance causes vibration as a result of the centrifugal force as the equipment is being rotated by e.g. an electric motor. A combination of forced and free vibrations is encountered when measuring vibrations on mechanical equipment.

Self-generated vibrations are not very often encountered in industry. The most common industrial example is probably machine tool chatter. This type of vibration occurs when certain conditions in the equipment will cause a cyclic force. Other examples of this type of vibration include whistles (e.g. a football referee whistle) and the vibration of a violin string when the bow moves across it.

- **Vibration Measurement**

Mechanical vibrations are most often measured using accelerometers, but displacement probes and velocity sensors are also used. Generally, a portable vibration analyzer is preferred. The analyzer provides the amplification of the sensor signal, it does the analogue to digital conversion, filtering, and conditioning of the signal. Many analyzers also offer advanced processing of the collected signals, as well as storage and display of the data.

There are several methods to mount vibration sensors, of which the most popular and preferred method is a stud mounting. Most sensors are supplied with a mounting stud that can be screwed tightly into a mounting hole. The mounting hole must be drilled and tapped into the measured surface. To avoid drilling into the casings of sophisticated machines, for instance electric motors, pumps, gearboxes etc., a hole can be drilled and tapped into a mounting block, or a standard supplied base can be used. The mounting block or base can then be secured onto the surface of the machine using epoxy or even superglue. Stud mounted pickups provides a

very good frequency response up to 10 kHz, and should be the used when working with accelerometers.

Another popular vibration sensor mounting method is through the use of magnets. Magnets can be secured onto the surface of a machine (given that it is made of a magnetic material) and the sensor is then stud mounted onto the magnet itself. Some sensors have a magnet embedded in their casings. The advantage of using magnets is that is makes measurements on multiple positions easier. If the surface is not magnetic, a washer can be fastened onto the surface using an epoxy or superglue, which will also suffice as a permanent marking of the measurement location.

It is often useful to try to visualize the path of the vibration through a structure before deciding on a location for the sensor. The question to ask is:

> *"What is the most direct path from the source of the vibration to a practical measurement location?"*

We know by now that a force cause vibration. If we knew what types of forces are generating the vibration, we will have a good idea how they will be transmitted through the physical structure of the machine and where they will cause vibrations. With rotating machines, this point is almost always directly on the machine's bearings. The reason for this is that the various dynamic forces from a rotating machine must be transmitted to the foundation through the bearings. As a rule of thumb, vibration readings on rotating machines must be taken in the horizontal, vertical and axial direction on each bearing. This concept is diagrammatically depicted in Figure 1 and

Figure 2, where we have measurement locations at the respective bearing housing of a pump. At each location we will take a vertical, horizontal and axial vibration reading. Vertical and horizontal readings can also be referred to as radial readings with rotating machines, because they represent readings at radial locations with respect to the shaft rotation. The front of the pump head is the best location to measure axial vibration excursions and to pick up misalignment and/or pumping element, as shown in Figure 3.

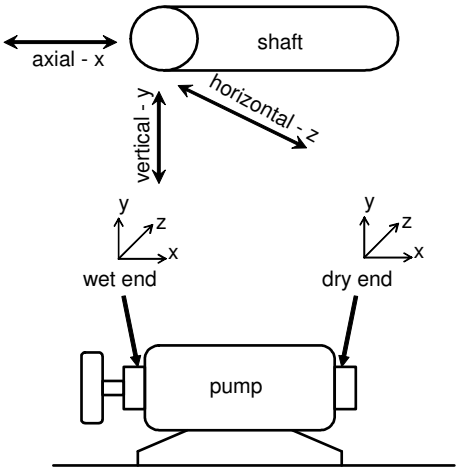

Figure 1

Vibration measurement locations on a pump

Figure 2

Locations for radial vibration readings

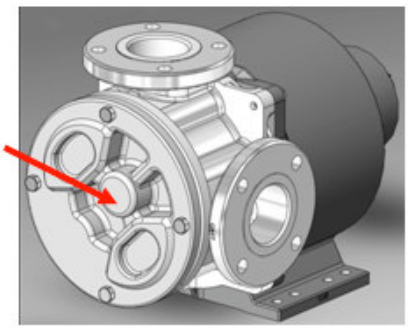

Figure 3

Location for axial vibration reading

Even when taking readings on bearing housing, the most direct path of the vibration must always be considered. For example, examine Figure 4, which diagrammatically depicts a machine casing. It is clear that the best measurement location for axial measurements is not in the middle of the flange, but on its edge, where there is a direct path to the bearing. The same applies to the vertical sensor, where the most direct path to the bearing is directly on the mounting flange and not on the casing of the machine.

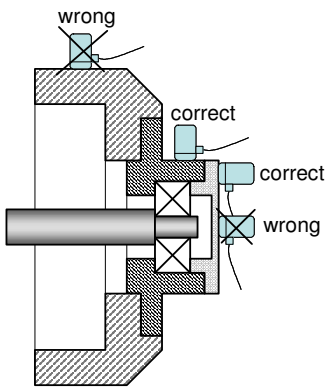

Figure 4

Sensor location

Further readings can also be taken on other locations that seem relevant to a particular vibration problem. Always remember to mount the sensor perpendicular to the measured surface, and mark all measurement locations clearly so that future readings may be taken in the exact same location. In addition, try to take routine vibration readings under more or less same operating conditions, within 10-20% of the same speed. If possible, take readings under full load with pumps, gearboxes, motors, etc.

- **Vibration Spectrum Basics**

There are many different methods available for analyzing vibration data. The most basic method involves displaying the vibration data in the frequency domain, also called the vibration spectrum. The frequency of the vibration is the number of vibration cycles per time unit. The vibration spectrum is fundamental to vibration monitoring, because it yields the information that is effectively "hidden" in the vibration waveform. Vibration spectra can be represented in various different ways, of which the Fast Fourier Transform (FFT) and the Power Spectral Density (PSD) are the most popular. The concept of the vibration spectrum can be simply explained by means of an example. Consider the time waveform in Figure 5, which has a frequency of 10 Hz (we can count ten complete cycles during one second) and amplitude of 5 mm (the units of the amplitude could be any unit related to vibration, e.g. displacement, velocity or acceleration).

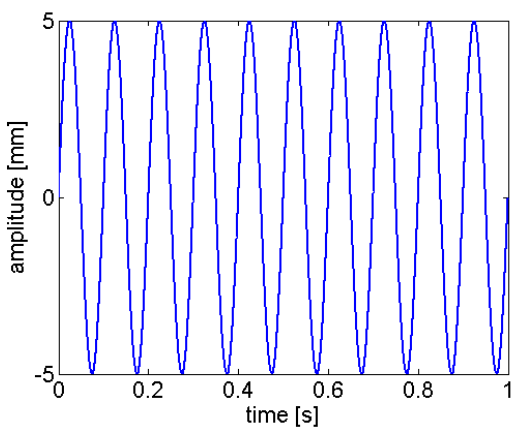

Figure 5

Example time waveform

The time waveform is a plot of time vs. amplitude, and is referred to as the time domain. The time domain signal can be converted into a frequency domain representation, which is in fact the spectrum. The spectrum is a plot of frequency vs. amplitude. The FFT for the time waveform from Figure 5 is plotted in Figure 6. We can clearly read from this plot that the frequency content of the signal is 10 Hz, and that its amplitude at 10 Hz is 5 mm.

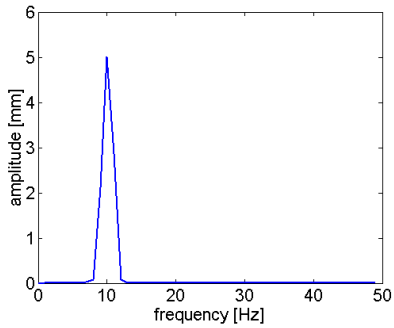

Figure 6

FFT of 10 Hz time waveform

What now, if our time waveform has more than one frequency present? Let's take a look at another example. Consider the waveforms in Figure 7. In the top graph we have our 10 Hz waveform, called S1. The second waveform is a 25 Hz waveform with amplitude 2 mm, which we can call S2. The third waveform, plotted at the bottom, is S1+S2, which yields a much more complex waveform.

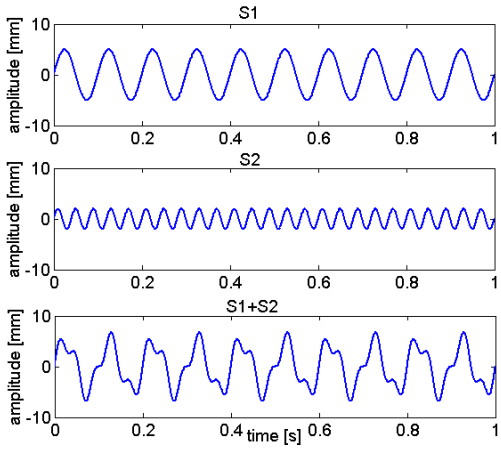

Figure 7

A complex waveform consisting of S1 + S1

Let us examine the FFT for S1+S2, depicted in Figure 8. We can clearly observe two peaks in spectrum, namely a 5 mm peak at 10 Hz, and a 2 mm peak at 25 Hz. Thus, by only looking at the spectrum, we can characterize our S1+S2 waveform much better than by examining the waveform from Figure 7. The frequency spectrum is hence much easier to interpret and gives us information that is often impossible to observe by just looking at the time waveform.

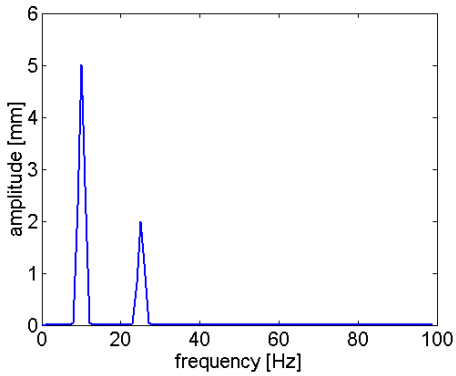

Figure 8

FFT for S1+S2

Pump Vibration

- **Excessive Vibration Levels in Pumps**

It is expected that all pumps will vibrate due to response from excitation forces, such as residual rotor unbalance, turbulent liquid flow, pressure pulsations, cavitation, and/or pump wear. The magnitude of the vibration will be amplified if the vibration frequency approaches the resonant frequency of a major pump, foundation and/or piping component. The issue of interest is not whether or not the pump vibrates, but:

- Is the amplitude and/or frequency of the vibration sufficient to cause actual or perceived damage to any of the pump components? Or…
- Is the vibration a symptom of some other damaging phenomenon happening within the pump?

Generally higher vibration levels (amplitudes) are indicative of faults developing in mechanical equipment. It is necessary to be concerned about vibration, because it has a major affect on the performance of a pump. Several pump components are seriously affected by vibration:

- Mechanical seals and packing
- Bearings and their seals
- Critical tolerances such the impeller setting
- Wear rings, bushings and impellers
- Pump and motor hold down bolts

These components can become worn, damaged or loose due to excessive vibration. The excessive vibration causes higher than normal forces on the system, and eventually these fluctuating loads will induce fatigue or wear, which will ultimately lead to a system failure.

The vibration comes from a number of sources that can include:

• Unbalanced rotating components	• Cavitation
• A bent or warped shaft	• Turbulence
• Pump and driver misalignment	• Water hammer

• Pipe strain	• Resonance
• Thermal growth	• Nearby equipment
• Worn, loose or damaged parts	• Critical speed

There is unfortunately no common standard for baseline vibration levels for all types of equipment. One should hence attempt to establish your own baseline vibration readings, based on a new or refurbished pump. A general rule of thumb in industry is to replace parts when the vibrations readings double from the established baseline.

- **Solutions to Mechanical Problems that Cause Vibration**

All rotating equipment should be balanced. Balance is always a problem, when pumping abrasives or slurries, because impeller will wear rapidly and become unbalanced. Bent shafts should be replaced because attempts to repair them usually fail. Do a proper pump/ driver alignment using either a laser or the reverse dial indicator method. Always install pipe from the pump suction to the pipe rack, never the other way around. Additionally, avoid putting strain on the pump or piping, by adjusting the system until it fits together without putting strain on the pump. The mass of the foundation should be five times the mass of the pump, base plate and other equipment being supported, to avoid the transmission of vibrations. To avoid cavitation, check the Net Positive Suction Head (NPSH) for the application. The pump, or one of its components, can resonate or cause resonance in other nearby equipment Isolation, by vibration damping, is the easiest solution to this problem. Because balancing and alignment of pumps is so critical and probably responsible for 80% of vibration-related problems with pumps, we will discuss these in more detail.

- **Balancing pumps**

It is a known fact that an unbalance of pumps will significantly reduce the life of pump components, will also lower its reliability, and its efficiency. Why do pumps, when balanced during assembly, gradually become unbalanced?

- Product attaches to the impeller
- Impeller wear and damage caused by erosion and corrosion.
- A seal or sleeve that is not concentric to the shaft. The use of set screws guarantees that it will not be concentric.
- The coupling, impeller, mechanical seal, bearings, sleeve, keys, etc. were not balanced as an assembly.
- The impeller diameter was reduced and not re-balanced.

Always balance the impeller after repair or coating to quality grade G 6.3 based on the ISO 1940/1 -2003 specifications. On a multistage pump, balance each impeller separately and then balance them as an assembly. Balancing should be done by an expert experienced with impeller balancing, because it is not a simple procedure. Be careful of attaching or removing weight to the impeller that may interfere with the hydraulics of the pump.

- **Pump alignment**

After unbalance, pump misalignment is a major cause of pump vibration. A little misalignment at the power-end of the pump is a lot of misalignment at the wet-end, and unfortunately that is where the seal is located in most pump applications. Misalignment

will cause many problems, including leakages, wear, fatigue and premature failures. Before attempting an alignment, check the following:

- The pump must have a straight shaft that has been dynamically balanced.
- Good wear rings with the proper clearance.
- The correct impeller to volute, or back-plate clearance.
- The elimination of "soft foot."
- Eliminate all pipe strain.
- Good bearings installed on a shaft with the proper finish and tolerances.
- A good mechanical seal set at the proper face load.

The alignment process entails first leveling the pump and driver, and then aligning the shaft centerlines of the pump and the driver. Based on dial gauge measurements, calculations are done to determine the shim thicknesses and the amount of left/right movement. These calculations must consider that the pump and driver operating temperature will probably be very different than the ambient temperature when you are taking the readings. The supplier of the pump can be contacted to supply the expected thermal growth when the machines are hot. Bear in mind that flexible couplings are not an appropriate solutions to misalignment problems. The coupling is used to transmit torque to the shaft and compensate for thermal growth. Some standard methods for alignment include:

- Reverse dial method
- Face and rim dial method
- Laser alignment system

It is useful to install jack-bolts or something similar to facilitate moving of the driver, as shown in Figure 9.

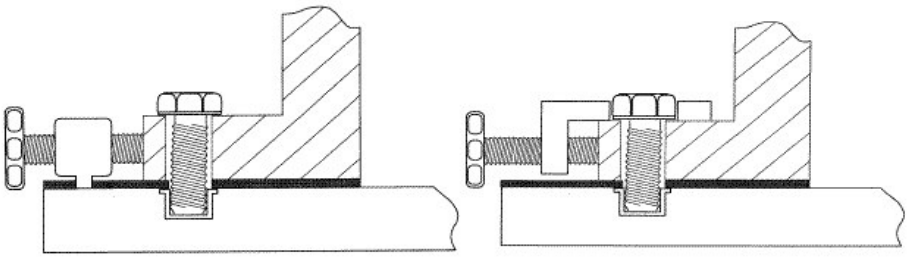

Figure 9

Installation of alignment bolts

Condition Monitoring

- **Trending Pump Vibration Levels**

As discussed before, machines exhibit unique vibration characteristics. Ideally one should trend vibration amplitudes at specific frequencies in order to establish a knowledge base of your own equipment. An example of such a trending graph is shown in Figure 10. Based on the history of the machine and past experience, one can determine at which vibration levels the machine must be shut down or scheduled for maintenance.

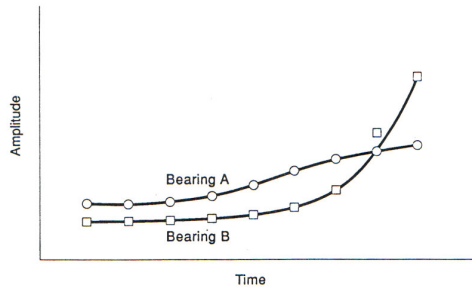

Figure 10

Trending the failure of two bearings

When examining the trending graph, two important questions can be raised:

- Which frequencies of vibration amplitudes must be used in the trending graphs?
- How often must vibration readings be taken for condition monitoring?

It is suggested, to trend frequencies which have known fault frequencies in the system, as well as the highest peaks in vibration spectrum (e.g. the highest to the third or fourth highest). It is however also important to regularly compare the entire vibration spectrums, in order to determine if new peaks are developing. An easy way to do this is with a waterfall plot, which is a 3D view of vibration spectra taken at regular intervals. An example of such a plot is shown in Figure 11, where it is obvious that a fault started to develop and was picked up with the second measurement (Feb ’96) and further deteriorated (Mar ’96) but the fault was then fixed and the spectrum at Apr ’96 compares again with the first reading taken in Jan ’96.

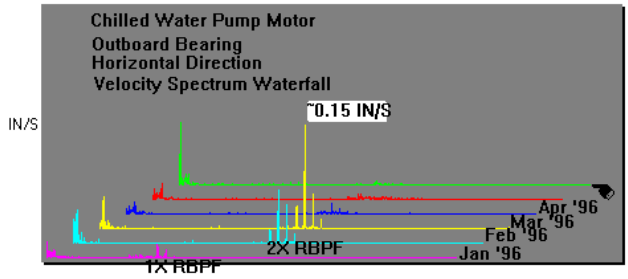

Figure 11

Example waterfall plot of pump vibration

The monitoring interval for a given machine is largely determined by its operating history, design and duty cycle. It is also influenced by the cost factor and the difficulty of monitoring each location to be measured. Anything short of continuous monitoring carries the risk that some untrendable failure will end up destroying the machine between the monitoring intervals.

It might be a reasonable proposition to decide on the monitoring intervals, based on the following criteria:

- Daily or weekly monitoring of machines with poor operating history, design flaws, stop-start or with other severe operating conditions.
- A monthly or quarterly monitoring interval for most machines.
- Annual/semi-annual nature of monitoring for machines with proven long lives or minimal criticality.

- Reduction in the monitoring interval of machines that begin to experience problems, until the time of repair. This interval can even be on an hourly basis.
- Baseline Levels

When historical vibration data for trending or waterfall plots is not available, it is really difficult to determine whether the vibration levels measured on the machine are acceptable. For balancing impellers, the G 6.3 standard should be followed according to the ISO standard. There are also some useful tables set up be the ANSI and API with vibration limits to help guide users to avoid excessive levels of vibration in centrifugal pumps. An example of such a table is presented in

Table 1. However, since neither of these standards is intended for moderate-speed positive displacement pumps, one can often rely on other, experience-based values. In these cases, the maximum peak in the spectrum should be used to determine the overall vibration amplitude. If the analyzer is not set on Root Mean Square (RMS), one should multiply the shown values with 0.7 to obtain the approximate corresponding RMS vibration value.

Table 1

Allowable pump field-installed vibration values

(Hydraulic Institute Standard ANSI/HI 9.6.4, 2000)

Pump Type	**Pump Size**	**Vibration RMS**
End Suction ANSIB73	<15kW > 75 kW	3.0mm/s 4.6 mm/s
Vertical Inline, Sep. Coupled ANSI B73.2	< 15 kW > 75 kW	3.0 mm/s 4.6 mm/s

End Suction & Vertical Inline Close-Coupled	< 15 kW > 75 kW	3.6 mm/s 5.3 mm/s
End Suction, Frame- Mounted	< 15 kW > 75 kW	3.6mm/s 5.3 mm/s
End Suction, API-610, Preferred Operation Region (POR)	All	3.0 mm/s
End Suction, API-610, Allowable Operation Region (AOR)	All	4.1 mm/s
End Suction, Paper Stock	< 7.5 kW > 150 kW	3.6 mm/s 5.3 mm/s
End Suction Solids Handling – Horizontal	< 7.5 kW > 300 kW	5.6 mm/s 7.9 mm/s
End Suction Solids Handling – Vertical	< 7.5 kW > 300 kW	6.6 mm/s 8.6 mm/s
End Suction Hard Metal/Rubber-Lined, Horizontal & Vertical	< 7.5 kW > 75 kW	7.6 mm/s 10.2 mm/s
Between Bearings, Single & Multistage	< 15 kW > 150 kW	3.0 mm/s 5.6 mm/s
Vertical Turbine Pump (VTP)	< 75 kW > 750 kW	6.1 mm/s 7.1 mm/s
VTP, Mixed Flow, Propeller, Short Set	< 75 kW > 2200 kW	5.1 mm/s 7.1 mm/s

There are several vibration severity charts for general purpose machinery; and the values in the charts are based on historical experience with many different types of equipment. The ISO vibration classification chart, from ISO 10816, is a good example. Most general-purpose pumps found in industry will fall into Class II. An example table from the ISO standard is copied in Table 2.

Table 2

ISO guideline for machinery vibration severity

ISO Guideline for Machinery Vibration Severity					
Ranges of Vibration severity		Examples of quality judgment for separate classes of machines			
Velocity - inch/sec – Peak	Velocity - mm/sec - rms	Class I	Class II	Class III	Class IV
0.015	0.28				
0.025	0.45				
0.039	0.71				
0.062	1.12				
0.099	1.8				
0.154	2.8				
0.248	4.5				
0.392	7.1				
0.617	11.2				
0.993	18				
1.54	28				
2.48	45				
3.94	71				

A -- Good
B -- Acceptable
C -- Still Acceptable
D -- Not Acceptable

- **Fault Diagnosis**

In this section we will briefly look at how to diagnose specific pump problems using vibration analysis.

- **Unbalance**

For all types of unbalance, the FFT spectrum will show a predominant peak at the 1× rpm frequency of vibration, and the vibration amplitude at the 1× rpm frequency will vary proportional to the square of the rotational speed. If the problem is unbalance, this peak usually dominates the vibration spectrum. Figure 12 depicts a rotor with a static unbalance. If the pickup is moved from the vertical (V in Figure 12) direction to the horizontal (H in Figure 12) direction, the phase will shift by 90° (±30°). Figure 12 is an example vibration spectrum that will be applicable to most cases of unbalance.

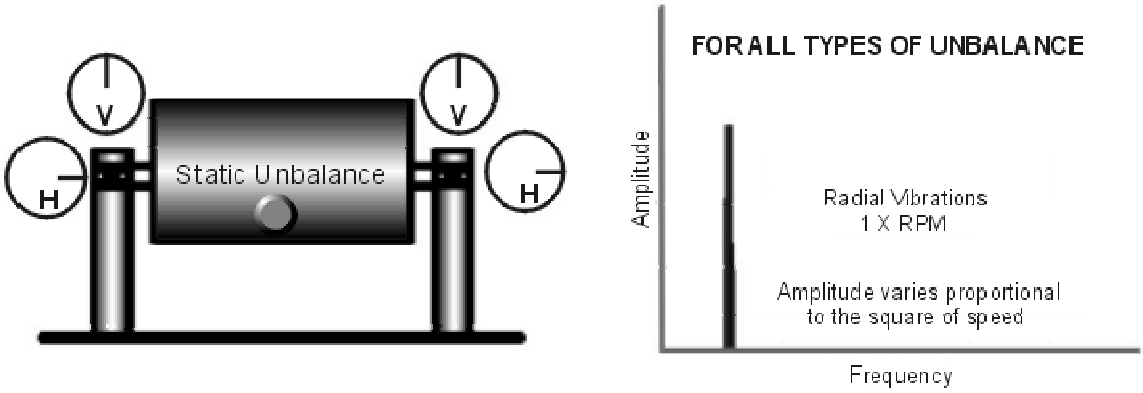

Figure 12

Statically unbalanced rotor and unbalance spectrum

A couple unbalance (Figure 13) will cause high axial and radial vibrations. The FFT spectrum again displays a single 1× rpm frequency peak. Couple unbalance tends to be 180° out of phase on the same shaft. Note that almost a 180° phase difference exists between two bearings in the horizontal plane. The same is observed in the vertical plane.

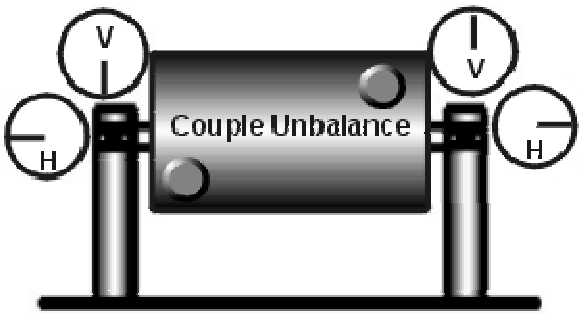

Figure 13

Couple unbalance

- **Eccentricity**

Eccentricity occurs when the centre of rotation is at an offset from the geometric centerline, and this may happen if the pump impeller is eccentric due to a manufacturing or assembly error. In the vibration spectrum, the maximum amplitude occurs at 1× rpm of the eccentric component, and will vary with the load even at constant speeds. In the horizontal direction, a phase shift of 90° will be observed. However in eccentricity, the phase readings differ by 0 or 180° (each indicates straight-line motion) when measured in the horizontal and vertical directions. Attempts to balance an eccentric rotor often result in reducing the vibration in one direction, but increasing it in the other radial direction (depending on the severity of the eccentricity).

- **Bent shaft**

When a bent shaft is encountered with a pump, the vibrations in the radial as well as in the axial direction will be high. Axial vibrations may be higher than the radial vibrations. The spectrum will normally have 1× and 2× components, as shown in Figure 14. If the:

- amplitude of 1× rpm is dominant, then the bend is near the shaft centre
- amplitude of 2× rpm is dominant, then the bend is near the shaft end.

The phase will be 180° apart in the axial direction and in the radial direction. This means that when the probe is moved from vertical plane to horizontal plane, there will be no change in the phase reading.

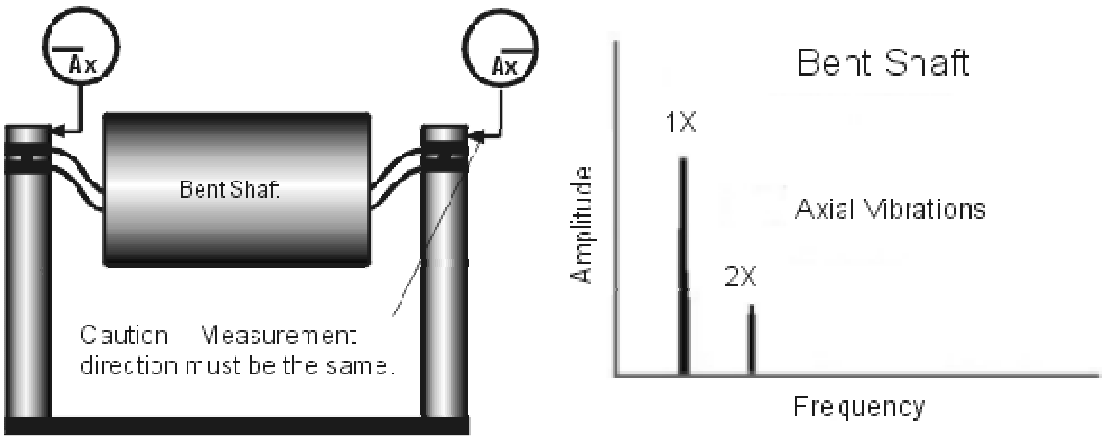

Figure 14

Bent shaft

- **Pump and motor misalignment**

There are basically two types of misalignment that can occur between the motor and the pump:

- Angular misalignment – the shaft centerlines of the two shafts meet at angle
- Parallel misalignment – the shaft centerlines of the two machines are parallel

As shown in Figure 15, angular misalignment primarily subjects the motor and pump shafts to axial vibrations at the 1× rpm frequency. A pure angular misalignment is rare, and thus, misalignment is rarely seen just as 1× rpm peak. Typically, there will be high axial vibrations with both 1× and 2× rpm. However, it is not unusual for 1×, 2× or 3× to dominate. These symptoms may also indicate coupling problems (e.g. looseness) as well. A 180° phase difference will be observed when measuring the axial phase on the bearings across the coupling, as shown in Figure 15.

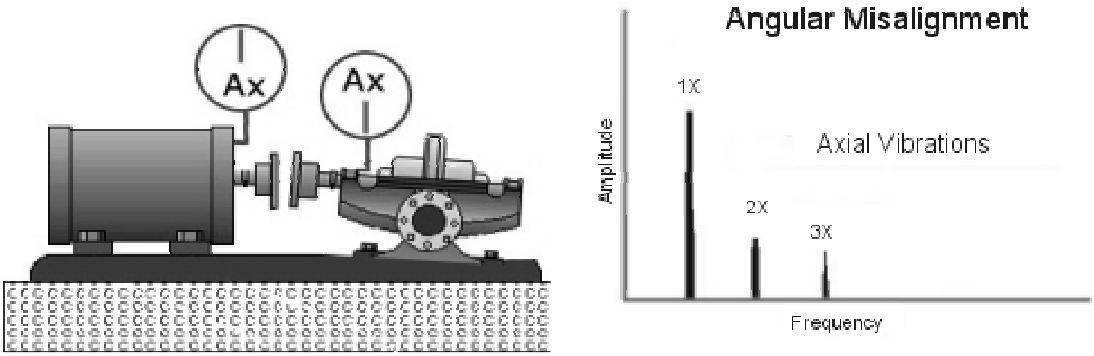

Figure 15

Angular misalignment

Parallel misalignment results in two hits per rotation; and, therefore a 2× rpm vibration in the radial direction. Parallel misalignment has similar vibration symptoms compared to angular misalignment, but shows high radial vibration that approaches a 180° phase difference across the coupling. As before, a pure parallel misalignment is rare and is commonly observed to be in conjunction with angular misalignment. Thus, both the 1× and 2× peaks will typically be observed. When the parallel misalignment is predominant, 2× is

often larger than 1×, but its amplitude relative to 1× may often be dictated by the coupling type. When either angular or parallel misalignment becomes severe, it can generate high amplitude peaks at much higher harmonics (3× to 8×) or even a whole series of high-frequency harmonics.

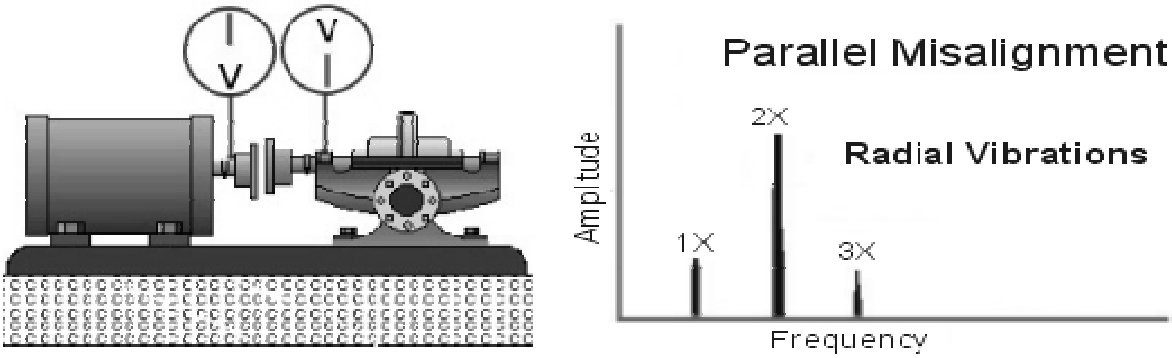

Figure 16

Parallel misalignment

- **Bearing misalignment**

Misalignment does not only appear with couplings. Sometimes, bearings are not accurately aligned with the shaft. Such "cocked" bearings can generate considerable axial vibration. A twisting motion is caused with approximately 180° phase shift from the top-to-bottom and/or side-to-side when measured in the axial direction of the same bearing housing. Even if the assembly is balanced, high axial vibrations will be generated. The vibration readings taken in the axial direction will show vibration frequencies of 1×, 2× and 3× rpm. Attempts to align the coupling or balance the rotor will not alleviate the problem. The cocked bearing must be removed and correctly installed. In the case of a radial sleeve bearing, no vibrations will be observed due to this cocked assembly. The problem must be accompanied by an unbalance. A radial and axial vibration will be observed, which results from the reaction of the misaligned bearing to the force due to unbalance. Balancing the rotor will reduce vibration levels in both directions

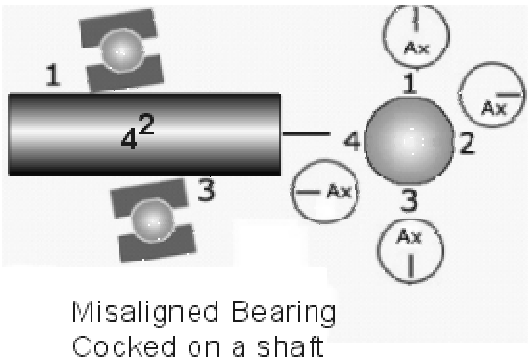

Figure 17

Misaligned bearing

- **Internal assembly looseness**

Internal assembly looseness can happen in a pump when a bearing on the shaft is loose, or the impeller of the pump becomes loose. The vibrations produced by this defect will produce many harmonics in the vibration spectrum. The phase is often unstable and can vary broadly from one measurement to the next, particularly if the rotor alters its position on the shaft from one start-up to the next. Mechanical looseness is often highly directional and may cause noticeably different readings when they are taken at 30° increments in the radial direction all around the bearing housing. Also note that looseness will often cause sub-harmonic multiples at exactly ½ × or ⅓ × rpm (e.g. ½ ×, 1½ ×, 2½ × and further). An example of a spectrum from a loose assembly is shown in Figure 18.

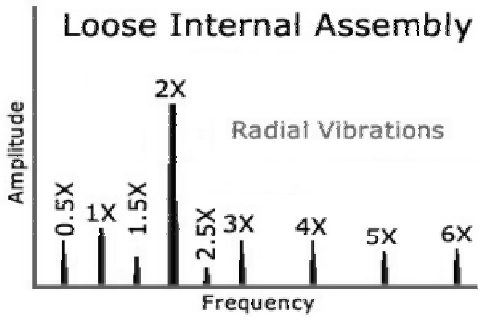

Figure 18

Loose internal assembly

- **Blade pass and vane pass vibrations**

Blade pass or vane pass frequencies are vibrations inherent to pumps and fans. In itself, it usually not problematic or destructive, but can generate a lot of noise and vibration that can be the source of bearing failure and wear of machine components.

Blade Pass Frequency (BPF) = number of blades (or vanes) × rpm

This frequency is generated mainly due to the gap problems between the rotor and the stator. A large amplitude BPF (and its harmonics) can be generated in a pump, if the gap between the rotating vanes and the stationary diffusers is not kept equal all the way around. In centrifugal pumps, the gap between the impeller tip and the volute tongue or the diffuser inlet is in the region of 4–6% of the impeller diameter, depending on the speed of the pump. If the gap is less than the recommended value, it can generate a noise that resembles cavitation. However, a vibration reading will immediately reveal the vane pass frequency of the impeller (Figure 19). Also, the BPF (or its harmonics) sometimes coincides with a system natural frequency, causing high vibrations.

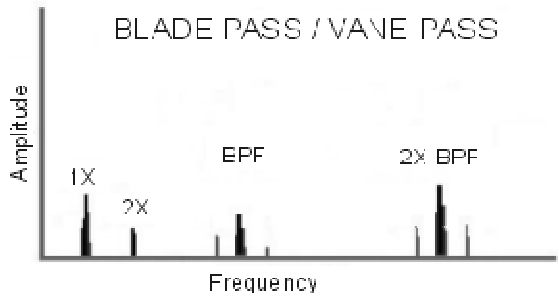

Figure 19

Pump blade pass frequency

A high BPF can be generated if the wear ring seizes on the shaft or if the welds that fasten the diffusers fail. In addition, a high BPF can be caused by abrupt bends in linework (or duct), obstructions which disturb the flow path, or if the pump impeller is positioned eccentrically within the housing.

- **Flow turbulence**

In pumps, flow turbulence induces vortices and wakes in the clearance space between the impeller vane tips and the diffuser or volute lips. Dynamic pressure fluctuations or pulsations produced in this way can result in shaft vibrations because the pressure pulses impinge on the impeller. Flow past a restriction in pipe can produce turbulence or flow-induced vibrations. The pulsation could produce noise and vibration over a wide frequency range. The frequencies are related to the flow velocity and geometry of the obstruction. These in turn excite resonant frequencies in other pipe components. The shearing action produces vortices that are converted to pressure disturbances at the pipe wall, which may cause localized vibration excitation of the pipe or its components. It has been observed that vortex flow is even higher when a system's acoustic resonance coincides with the generated frequency from the source. The vortices produce broadband turbulent energy centred around the frequency determined by the following formula:

$$f = \frac{S_n \times V}{D}$$

where f = vortex frequency (Hz), S_n = Strouhl number (dimensionless, between 0.2 and 0.5), D = characteristic dimension of the obstruction. An example of a vibration spectrum due to turbulence is shown in Figure 20.

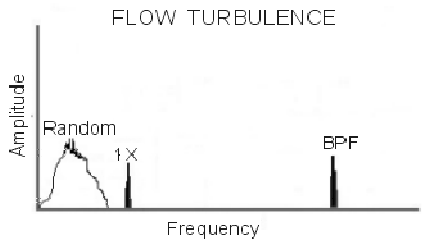

Figure 20

Turbulent flow spectrum

- **Cavitation**

Cavitation normally generates random, high-frequency broadband energy, which is sometimes superimposed with the blade pass frequency harmonics. Gases under pressure can dissolve in a liquid. When the pressure is reduced, they bubble out of the liquid. In a similar way, when liquid is sucked into a pump, the liquid's pressure drops. Under conditions when the reduced pressure approaches the vapour pressure of the liquid (even at low temperatures), it causes the liquid to vaporise. As these vapour bubbles travel further into the impeller, the pressure rises again causing the bubbles to collapse or implode. This implosion has the potential to disturb the pump performance and cause damage to the pump's internal components. This phenomenon is called cavitation. Each implosion of a bubble generates a kind of impact, which tends to generate high-frequency random vibrations, as depicted in Figure 21. Cavitation can be quite destructive to internal pump components if left uncorrected. It is often responsible for the erosion of impeller vanes. Measurements to detect cavitation are usually not taken on bearing housings, but rather on the suction piping or pump casing.

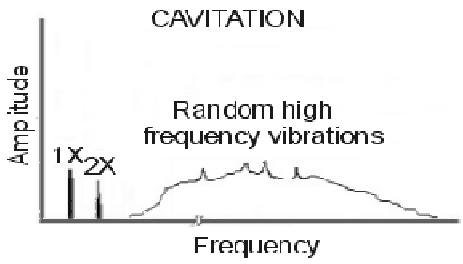

Figure 21

Cavitation spectrum

- **Centrifugal pumps**

Centrifugal pumps are known to generate nonspecific sub-synchronous, or even supersynchronous (larger than 1×) discrete frequencies of vibration. These are rare occurrences. But in all probability, transpire in two-stage (or higher) pumps, which have intermediate bushes that act as additional stiffness components. An increase in the clearances within these bushes leads to a fall in stiffness and this result in enlarged vibrations. In a two-stage overhung impeller pump, the interstage bushing plays an important role in providing stiffness. When clearances are high, this effect can reduce and high amplitude supersynchronous frequencies are generated. Once the clearances are adjusted back to normal, the pump operation stabilizes and the defect frequency disappears

Conclusion

In this paper it was shown how vibration measurement and analysis can be used to identify faults in pumps. Generally, increasing vibration levels indicate a pending failure. The advantage of using vibration as a condition monitoring tool is that it does not disturb the normal operation of the equipment, and can enable maintenance personnel to schedule maintenance in advance. Only the faults as indicated by the vibration analyses needs to be addressed and the consequence is a lot of monetary savings in terms of manpower and spare parts. Specific techniques can be used to identify and rectify specific pump problems, such as unbalance, misalignment, looseness, turbulence, cavitation and many others. With the

appropriate implementation of vibration-based techniques, pumps can operate with higher reliability and efficiency. It should be noted that specialized equipment and training is a requirement for the successful implementation of a condition monitoring program. Through training and experience, a vast knowledge base can be established which in the long term will be extremely valuable in achieving safer and more efficient operations.

Acknowledgements

The author would like to express his sincere gratitude towards IDC for the invitation to present this paper.

References

1. IDC Workshop notes, "Rotating Machinery Inspection and Precision Maintenance," published by IDC Technologies, Perth, Australia, 2005.
2. IDC Workshop notes, "Practical vibration analysis and predictive maintenance," published by IDC Technologies, Perth, Australia, 2001.
3. P.E. Bloch, "Pump condition monitoring," accessed online at http://www.peopleflo.com on 9 January 2008.
4. William McNally, "Centrifugal pump vibration readings", accessed online at http://www.mcnallyinstitute.com/02-html/2-09.html on 9 January 2008.
5. William McNally, "Another look at dynamically balancing the pump rotating components", accessed online at http://www.mcnallyinstitute.com/09-html/9-01.html on 9 January 2008.
6. International Standards Organization (ISO), "Mechanical vibration -- Balance quality requirements for rotors in a constant (rigid) state -- Part 1: Specification and verification of balance tolerances", ISO 1940/1 -2003, published by the ISO, 2003.
7. William McNally, "Pump and driver alignment" accessed online at http://www.mcnallyinstitute.com/14-html/14-03.htm on 9 January 2008.
8. Steve Goldman, "Vibration Spectrum Analysis, 2nd edition", Industrial Press Inc., New York, 1999.
9. Mitchell Stansloski, "Case Study: Spike Energy™ - It's Not Just Mechanical Anymore", accessed online at http://www.pioneer-engineering.com/resources/article_4 on 9 January 2008.
10. International Standards Organization (ISO), "Mechanical vibration - Evaluation of machine vibration by measurements on non-rotating parts - Part 1: General guidelines", ISO ISO 10816-1:1995, published by the ISO, 1995.
11. Ali M. Al-Shurafa, "Resonance analysis: A vertical pump case history," accessed online at http://www.plant-maintenance.com/articles/pump_resonance_case.pdf on 9 January 2008.